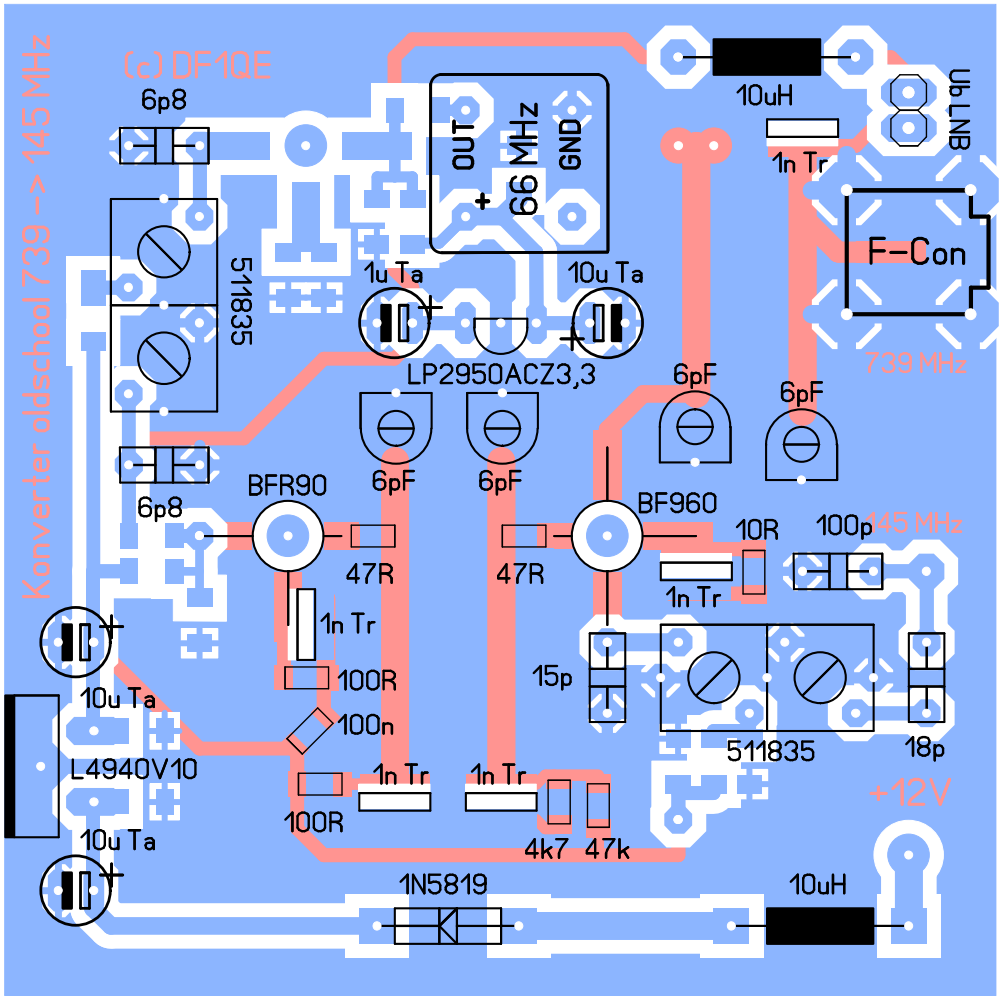
Konverter oldschool 739 -> 145 MHz
(c) DF1QE
6p8
511835
6p8
10u Ta
L4940V10
10u Ta
1u Ta
10u Ta
LP2950ACZ3,3
OUT
66 MHz
GND
10uH
1n Tr
Ub LNB
F-Con
739 MHz
6pF
6pF
6pF
6pF
BFR90
47R
1n Tr
100R
100n
1n Tr
100R
47R
BF960
10R
100p
145 MHz
1n Tr
15p
511835
18p
1n Tr
4k7
47k
+12V
1N5819
10uH